Belgrave

Left hand model displayed

Superior Spa and Bath

CBM 06 [left hand model]

CBM 07 [right hand model]

Length: 1530 mm

Width: 950 mm
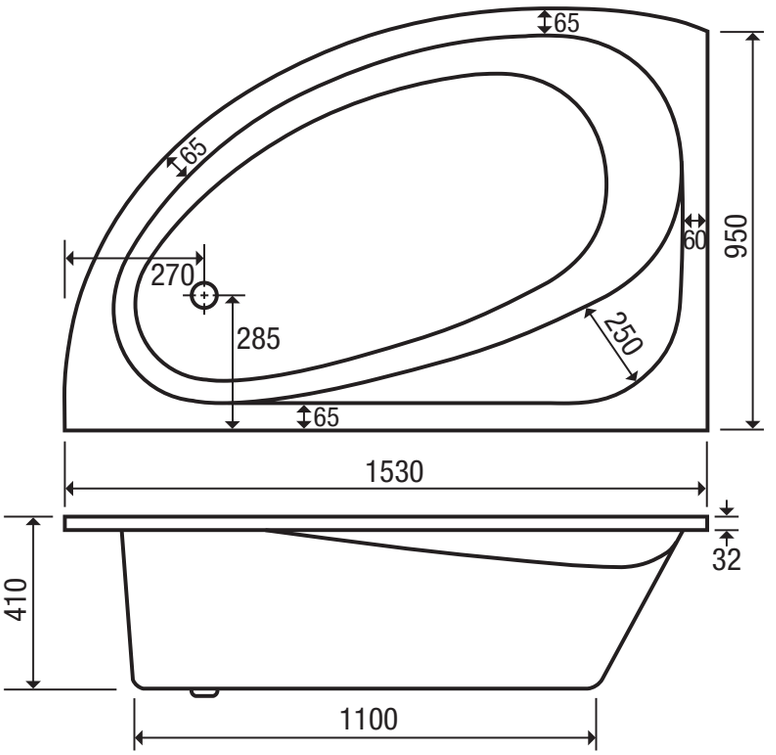
Depth: 410 mm